Experiment # 3

Answer 1:

```
module Expt3Q1(
    input A,
    input B,
    output C
    );
    assign C=A&B;
endmodule
```

Module (Code)

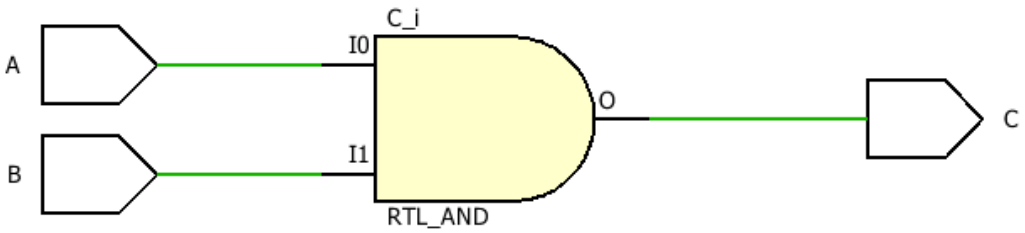

Schematic synthesis (Gate level)

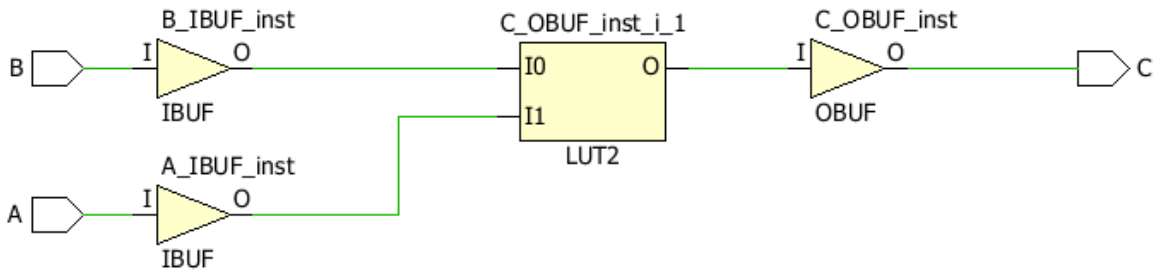

Schematic synthesis

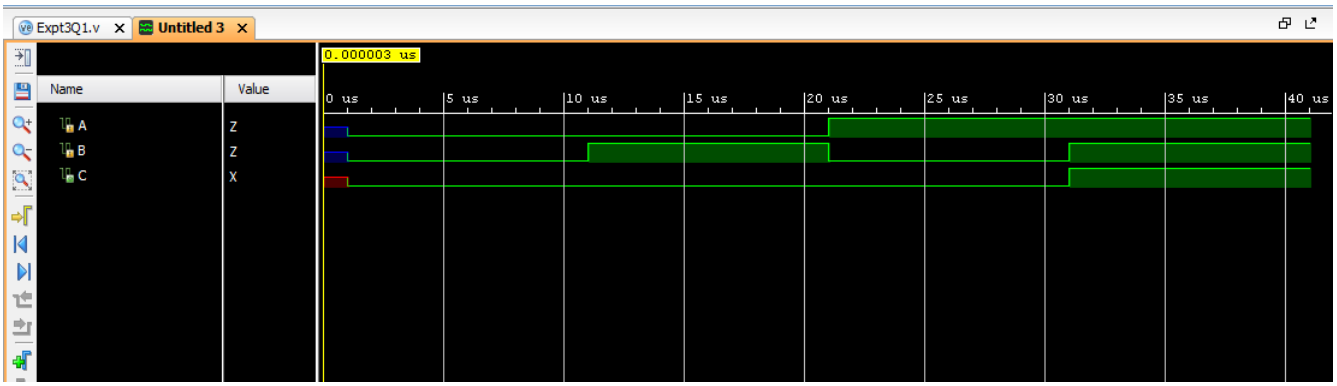

Output Waveform

Answer 2:

```
module Expt3Q2(
    input X,
    output Y
    );
    assign Y=~X;
endmodule
```

Module (Code)

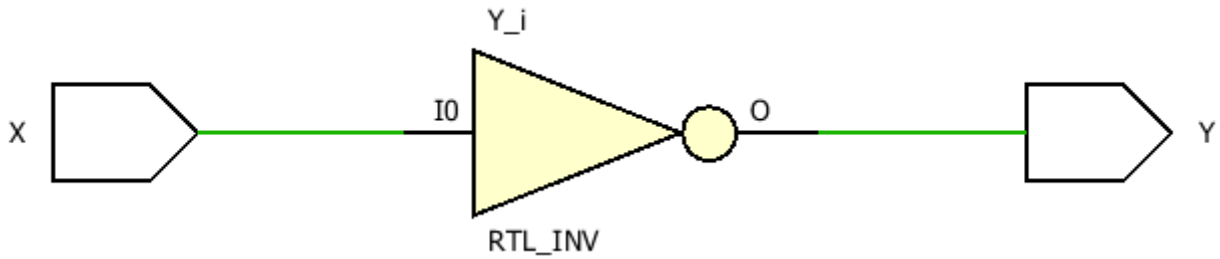

Schematic synthesis (Gate level)

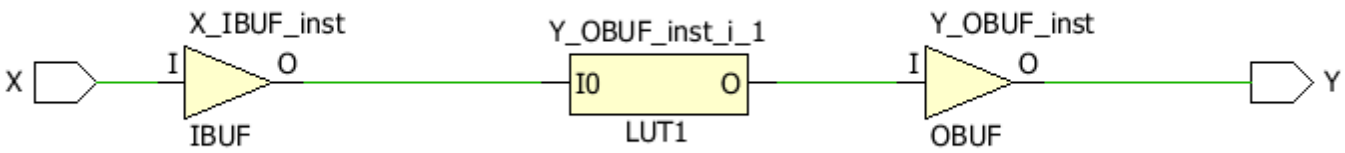

Schematic synthesis

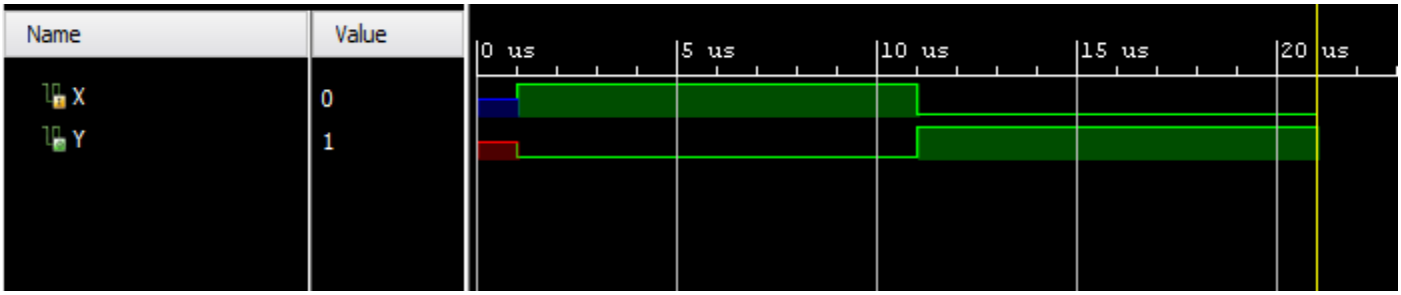

Output Waveform

Answer 3:

```
module Expt3Q3(
    input A,
    input B,
    output Y
    );
    assign Y=~(A&B);
endmodule
```

Module (Code)

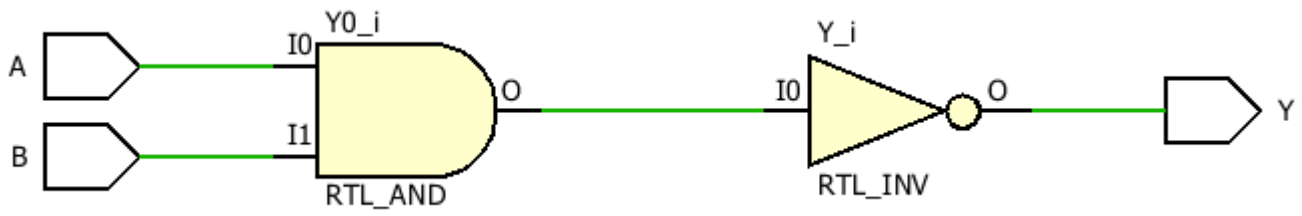

Schematic synthesis (Gate level)

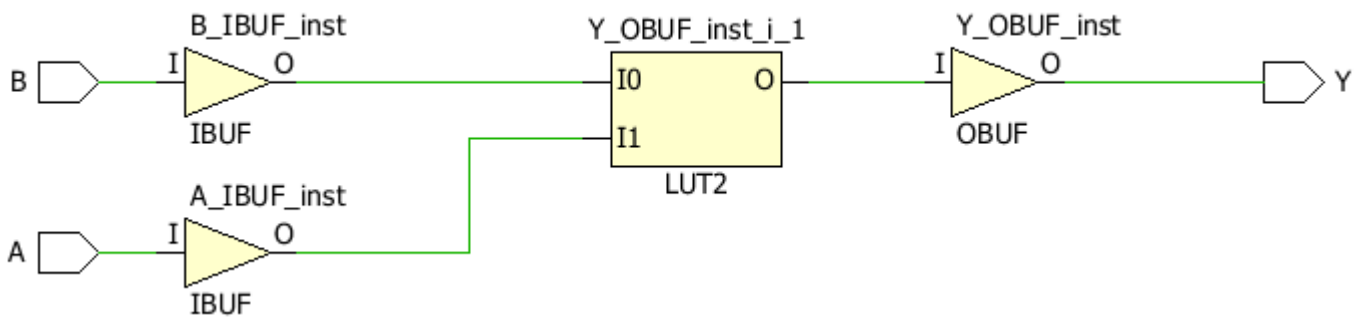

Schematic synthesis

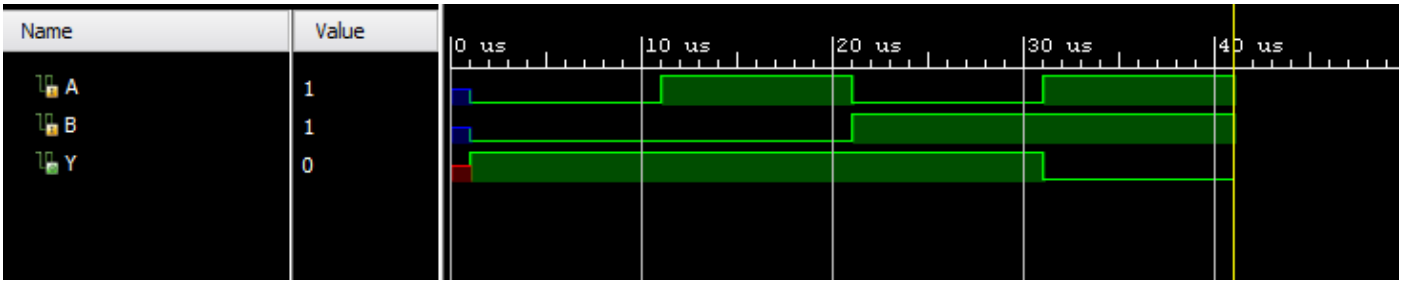

Output Waveform

Answer 4:

```
module Expt3Q4(
    input A,
    input B,
    output C,
    output Y
    );
    assign C = A&B;
    assign Y = ~C;
endmodule
```

Module (Code)

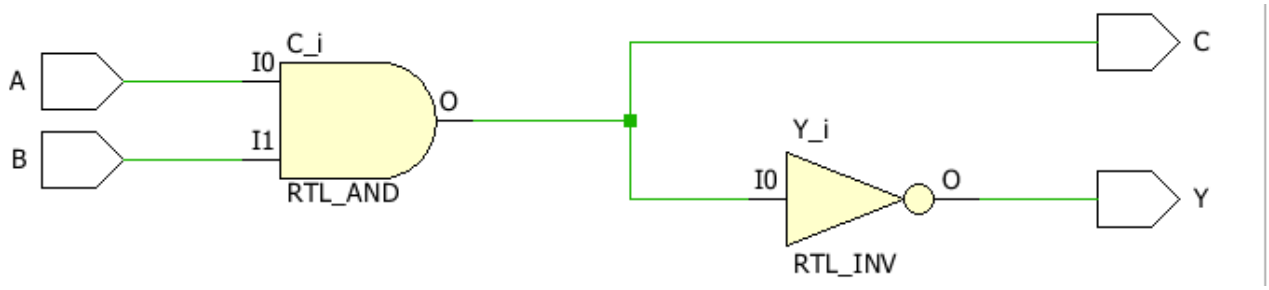

Schematic synthesis (Gate level)

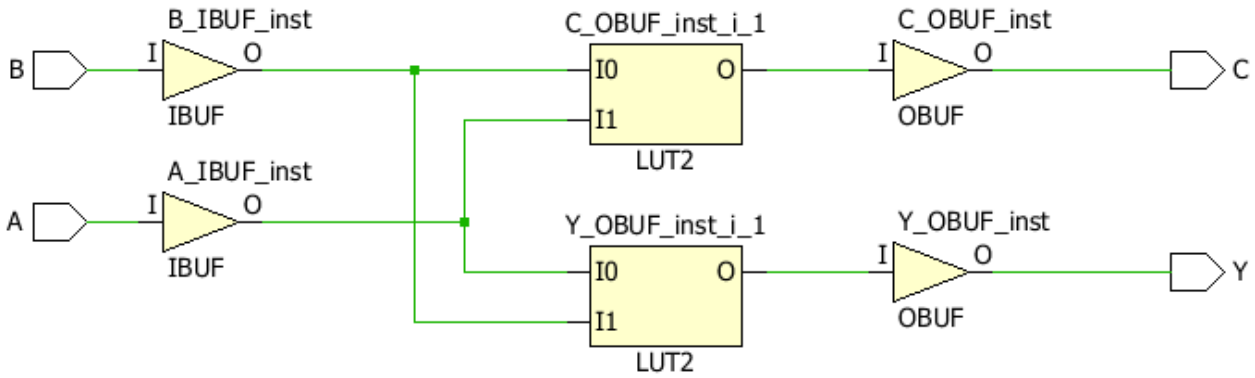

Schematic synthesis

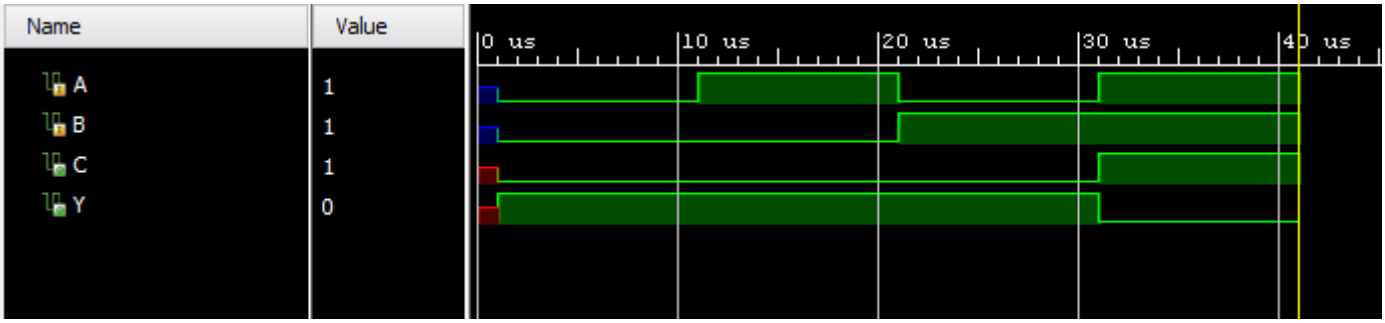

Output Waveform

Answer 5:

```
module Expt3Q5(
    input A,
    input B,
    output Y
    );
    assign Y = ~(A|B);
endmodule
```

Module (Code)

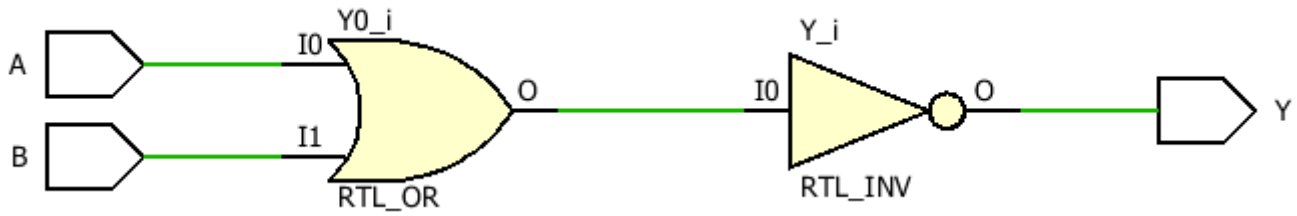

Schematic synthesis (Gate level)

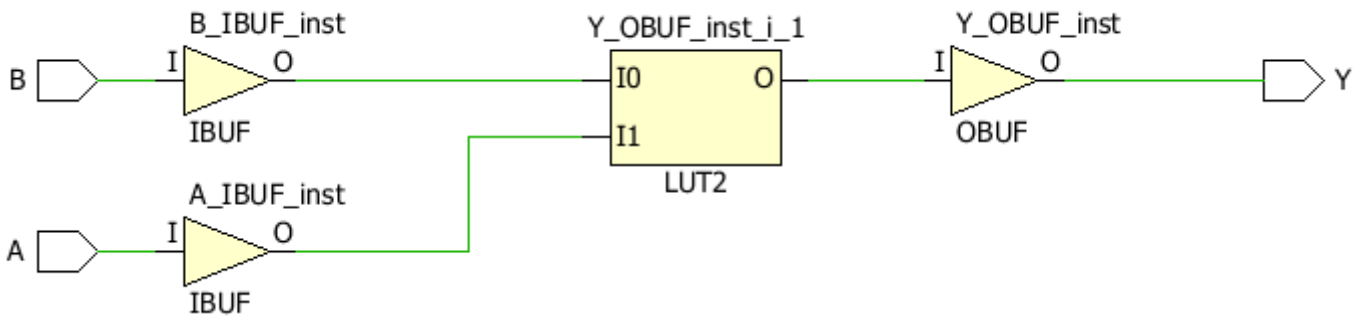

Schematic synthesis

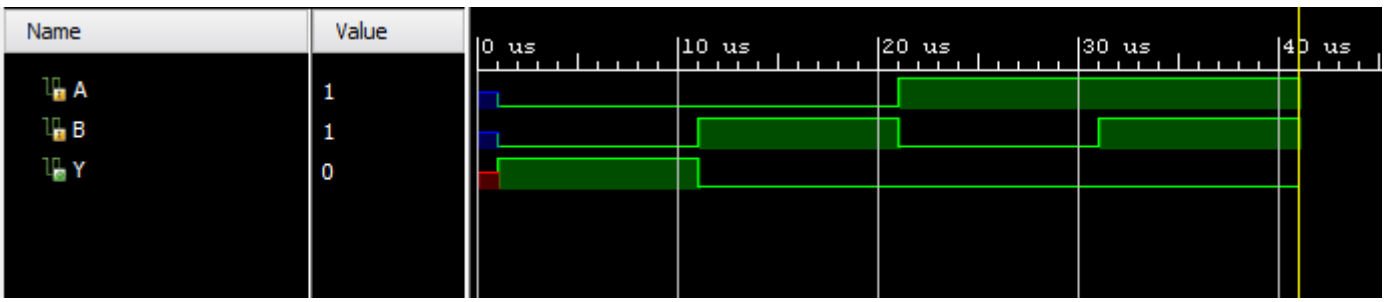

Output Waveform

Answer 6:

```
module Expt3Q6(
    input A,
    input B,
    output Y
    );
    assign Y = (~A)&(~B);
endmodule
```

Module (Code)

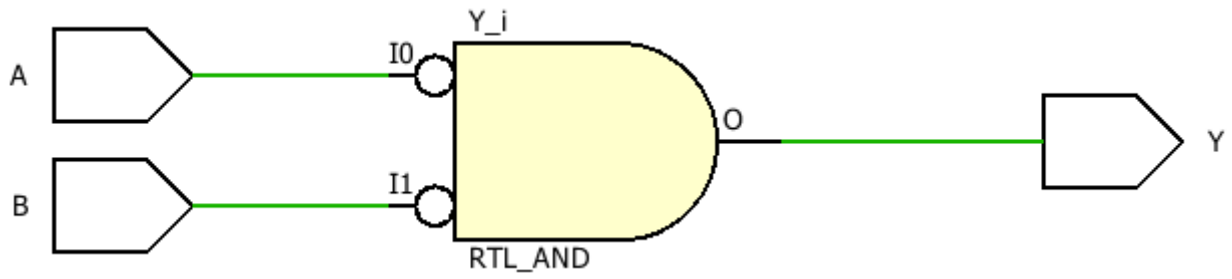

Schematic synthesis (Gate level)

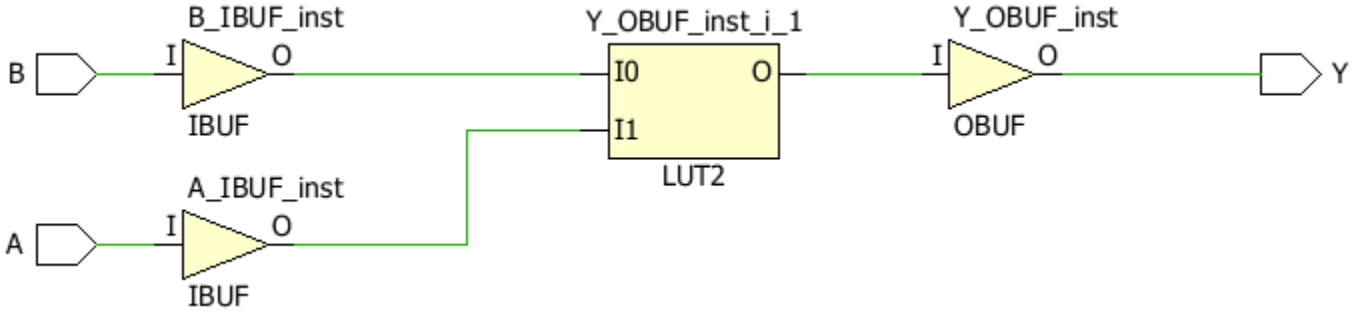

Schematic synthesis

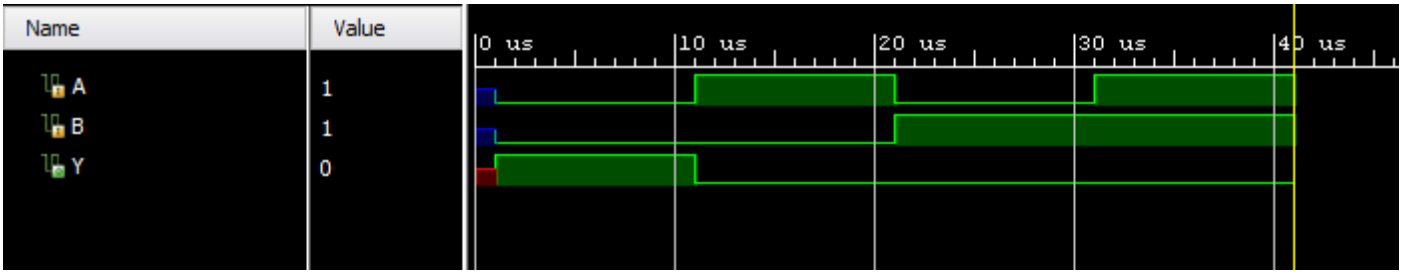

Output Waveform

***NOTE**: Therefore, we see that the output waveform is same for both parts (5) and (6).*

This follows from Demorgan's Law.

Answer 7:

```
module Expt3Q7(
    input A,
    input B,
    input C,
    input D,
    output Y
    );
    assign Y = (A&B)|(C&D);
endmodule
```

Module (Code)

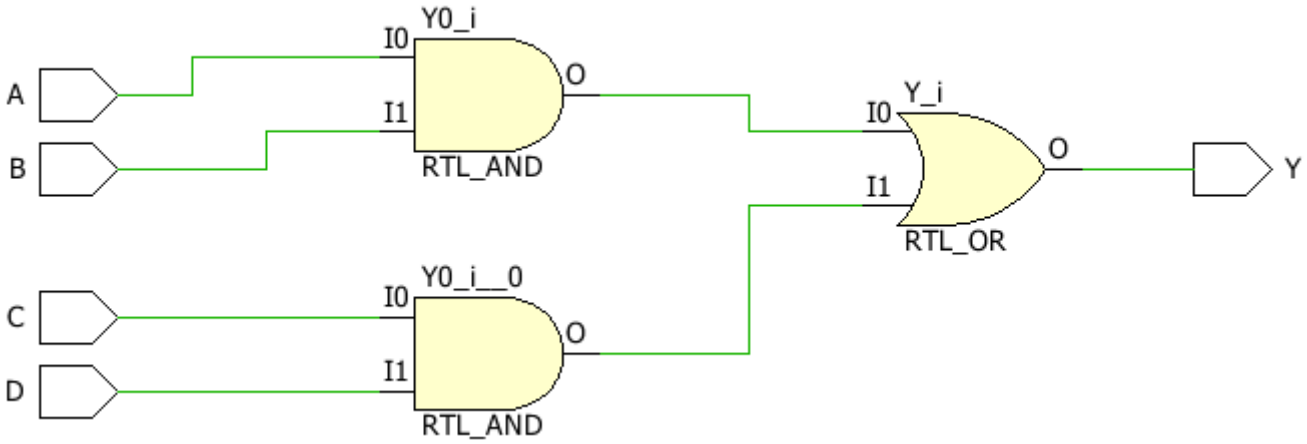

Schematic synthesis (Gate level)

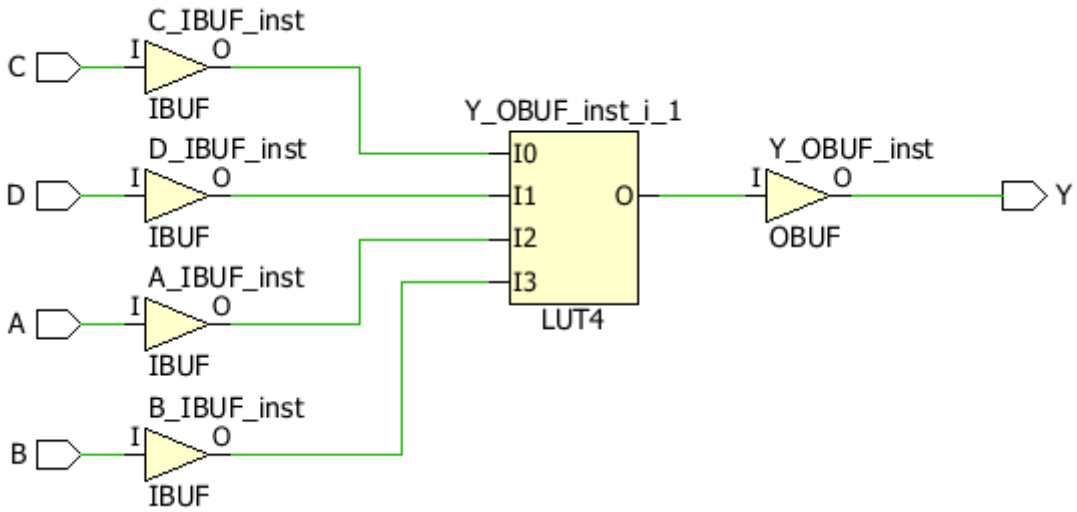

Schematic synthesis

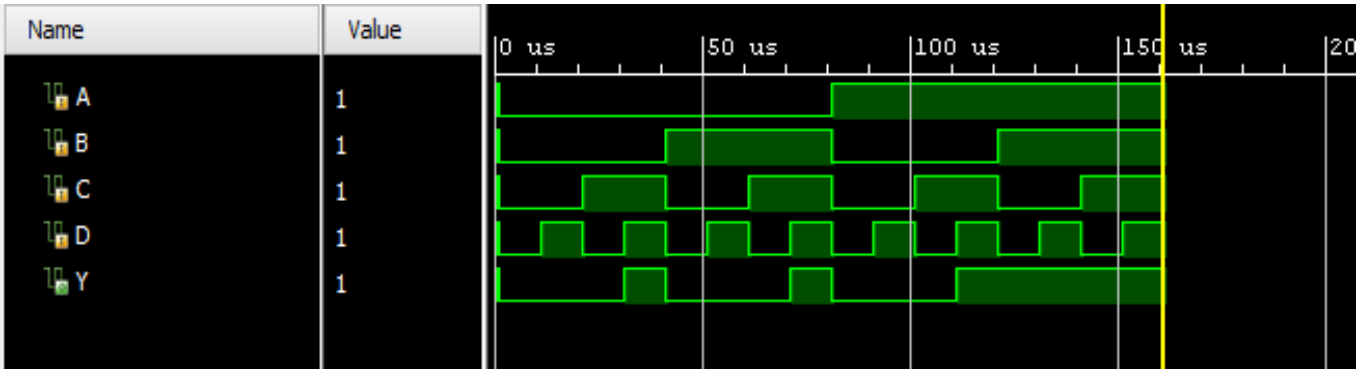

Output Waveform

Answer 8:

```
module Expt3Q8(
    input A,
    input B,
    output SUM,
    output CARRY
    );
    assign SUM = A^B;
    assign CARRY = A&B;
endmodule
```

Module (Code)

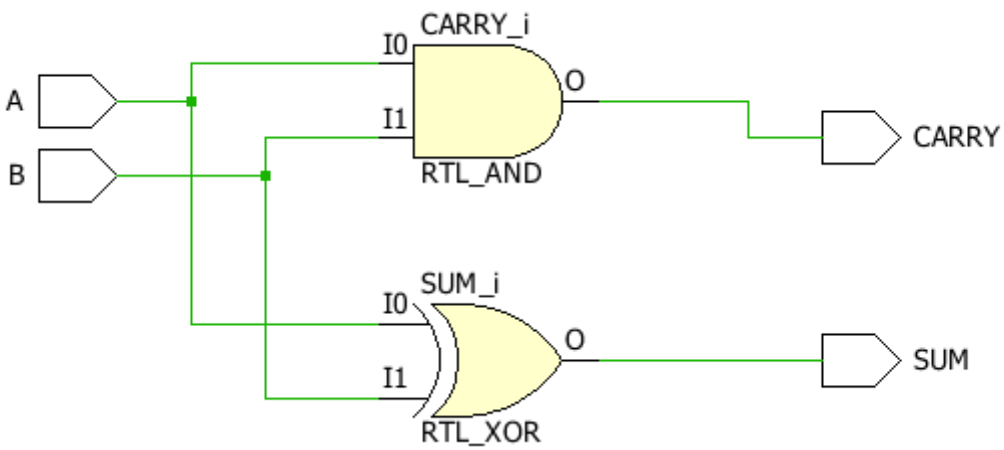

Schematic synthesis (Gate level)

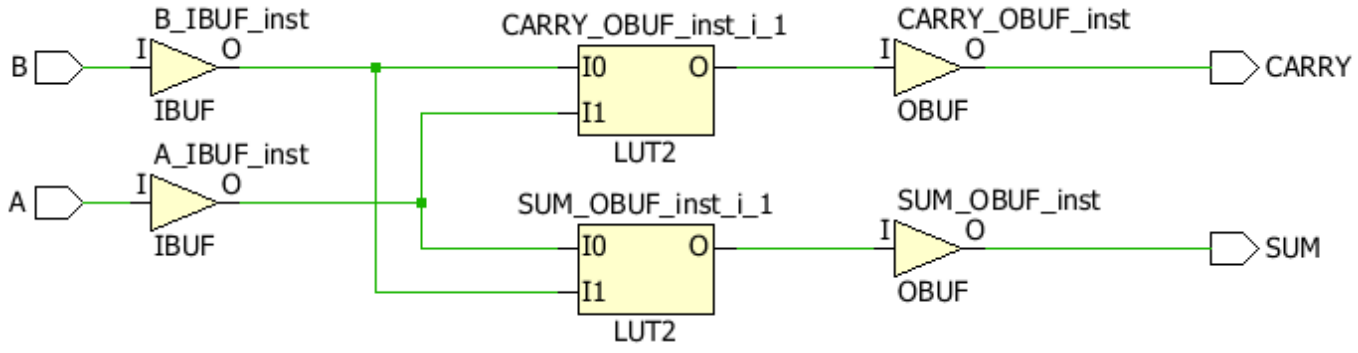

Schematic synthesis

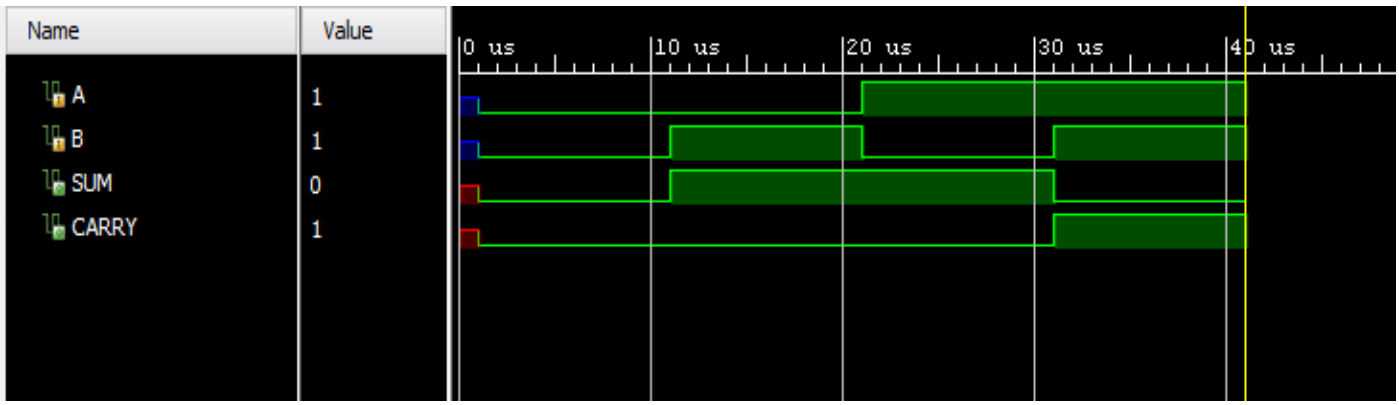

Output Waveform

Answer 9:

```
module Expt3Q9(
    input A,
    input B,
    input C,
    output c1,
    output c2,
    output CARRY,
    output s1,
    output SUM
    );
    assign s1 = A^B;
    assign c1 = A&B;
    assign SUM = s1^C;
    assign c2 = s1&C;
    assign CARRY = c1+c2;
endmodule
```

Module (Code)

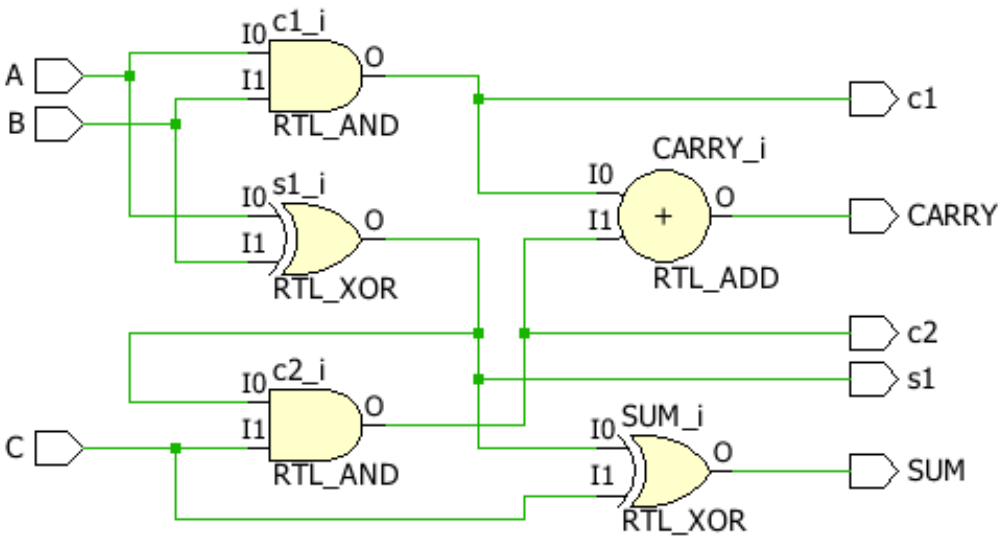

Schematic synthesis (Gate level)

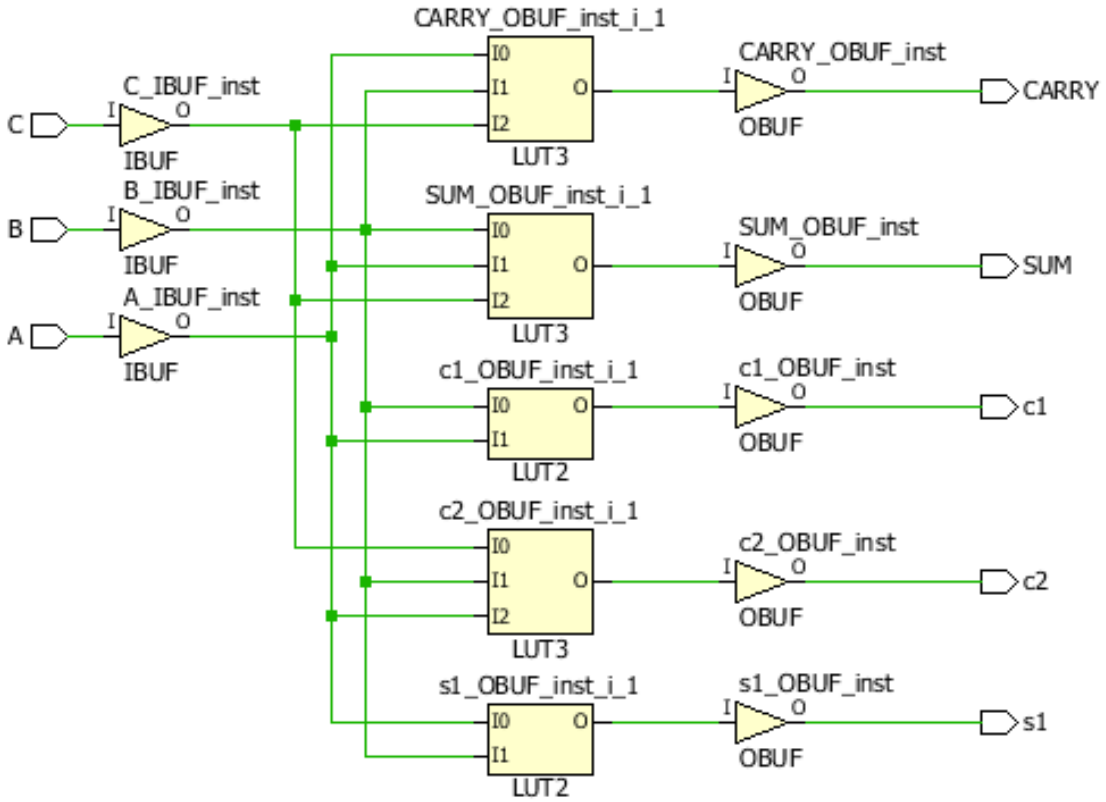

Schematic synthesis

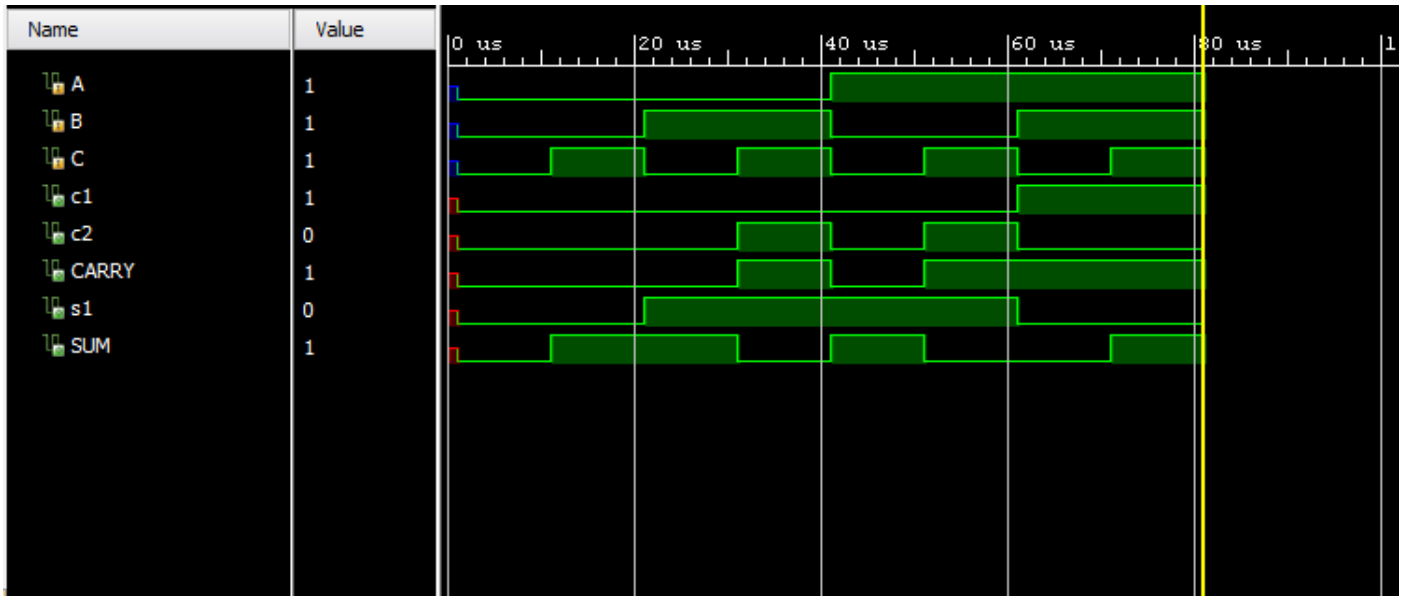

Output Waveform